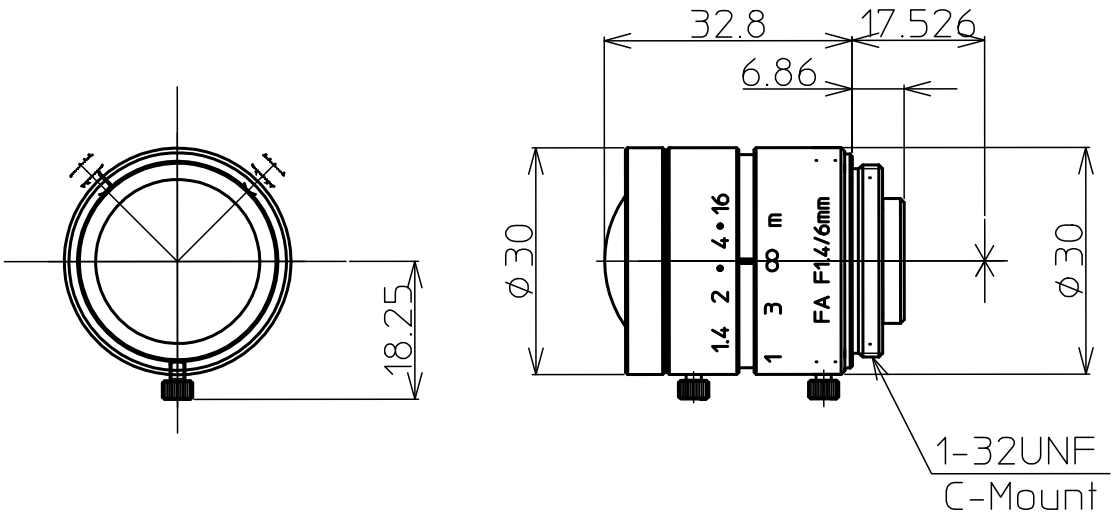

2/3" 1.4/6mm C		1/2"	1/3"
FOCAL LENGTH	f=6mm		
MAX. DIAMETER (RATIO)	F=1:1.4~16		
ELEMENT	7 **gp.**8 **element**		
PICTURE SIZE	6.6x8.8mm	4.8x6.4	3.6x4.8
ANGLE VER. ANGLE	61.2°	44.5°	33.3°
HOR. ANGLE	81.9°	59.4°	44.5°
DIA. ANGLE	102.9°	74.3°	55.6°
DISTORTION	-10.7%	-5.0%	-2.7%
SHOOTIG RANGE AT VER.	251mm	173.3mm	126.9mm
MINIMUM FOCUS HOR.	367mm	241.4mm	173.3mm
DISTANCE DIA.	530mm	320.8mm	223.6mm
MINIMUM FOCUS DISTANCE	0.1m		
FLANGE BACK	17.526 mm in air		
BACK FOCUS	11.3mm in air		
FILTER SCREW SIZE	----		
FRONT/REAR EFFECTIVE DIA.	**front** φ21.5mm **rear** φ11.0mm		
MOUNT	C-MOUNT		
EXIT PUPIL	-30.2		
TENPERATURE RANGE	-10~+45°C		
STORNG TNEPERATURE RANGE	-40~+60°C		
RESOLUTION CENTER/CORNER	**Center** 100本/mm **Corner** 40本/mm		

		LM6JC		
		2/3" 1.4/6mm		